575 Rated Voltage, 600 Max Voltage, High Z, Impedance.								
Part Number	Horsepower (HP)	Motor Amps (A)	Maximum Amps (A)	Inductance (uH)	Losses (W)	Weight (LBS)	Available Lug Kit	Terminal Hole Size (Inches)
KDRX45HE3R	700	672	750	57	1393	620	SLK15	0.53

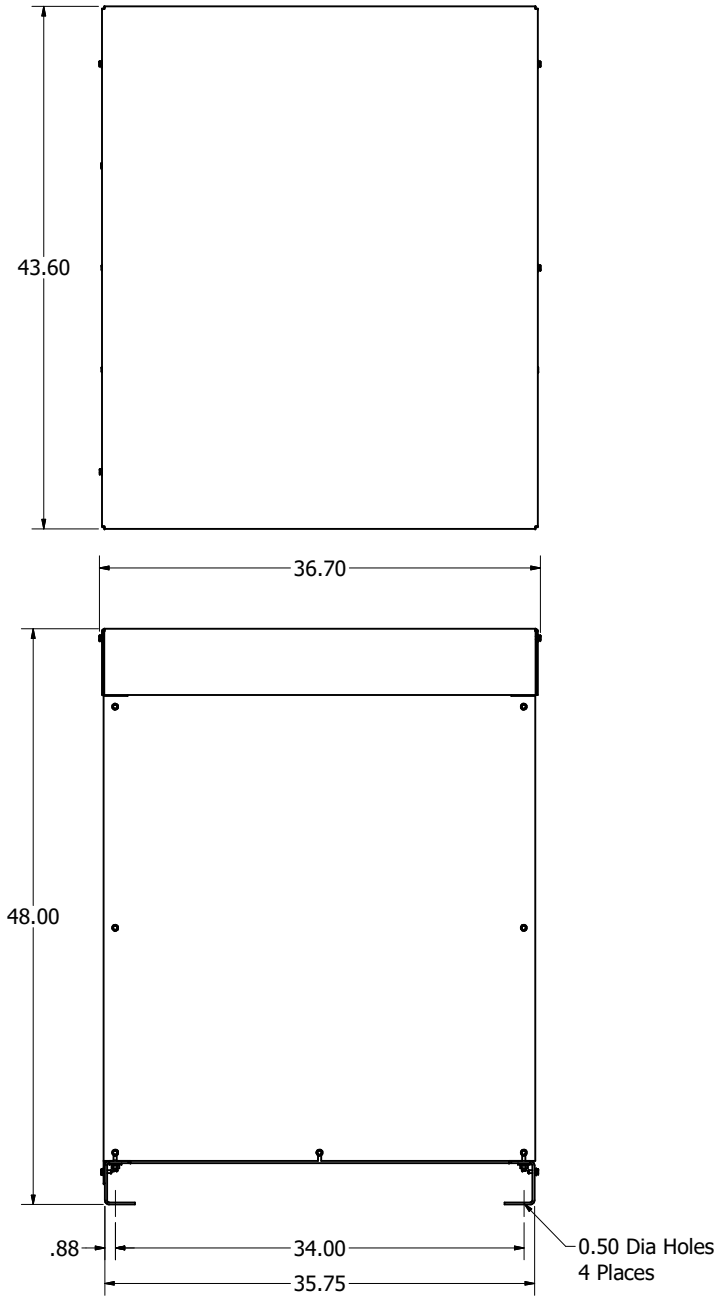

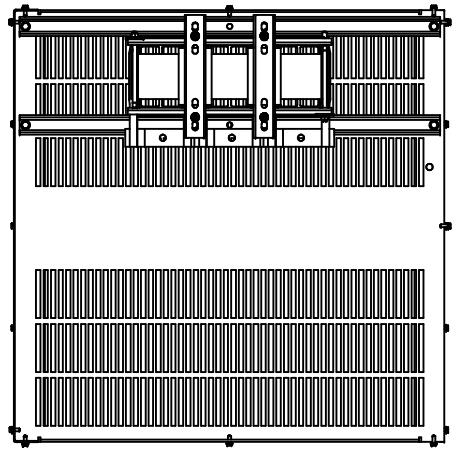

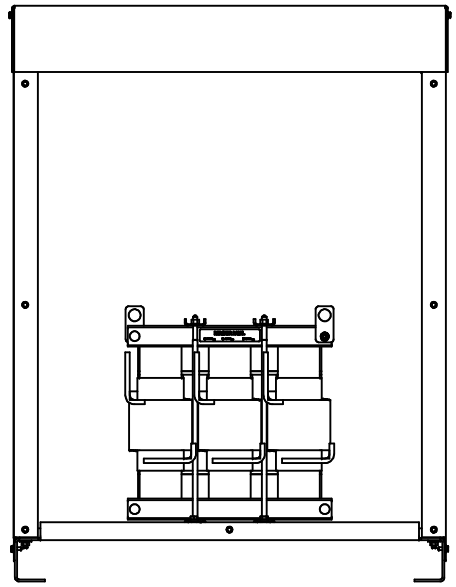

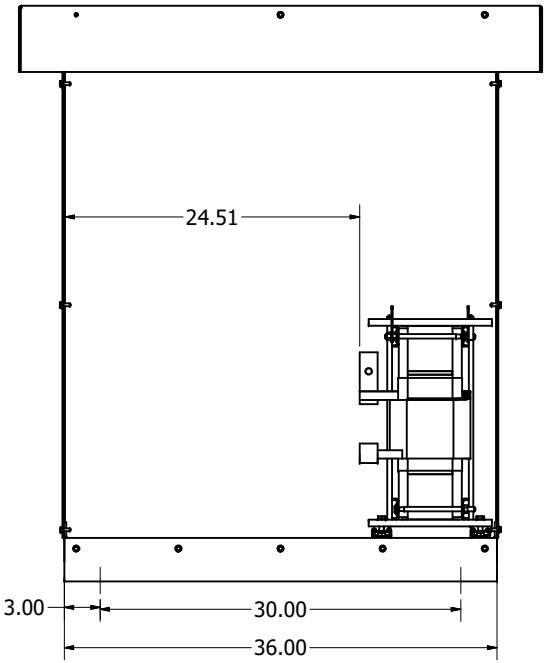

Customer Is Responsible For Installation to Meet All National And Local Electrical Codes.

Material(s) Shall be RoHS Compliant

TOLERANCES (EXCEPT AS NOTED)	THE INFORMATION AND DESIGNS CONTAINED IN THIS DRAWING ARE CONFIDENTIAL AND THE PROPRIETARY PROPERTY OF ALLIENT INC. AND ITS SUBSIDIARIES. NEITHER THIS DESIGN NOR ANY INFORMATION CONTAINED IN THIS DRAWING MAY BE REPRODUCED OR DISCLOSED TO OTHERS WITHOUT THE EXPRESS WRITTEN CONSENT OF ALLIENT INC. AND ITS SUBSIDIARIES.
DECIMAL .XX ± .25 .XXX ± .10	
FRACTIONAL ± 1/32	
ANGULAR ± 1°	

NO	REVISION	DATE	BY
B	6688, 760A to 750A Max	6/27/2024	DSW
2024-	As Designed	11/1/2023	DSW

DRN. BY: DSW
DATE: 11/1/23

Allient Power

W132N10611 Grant Drive
Germantown, WI 53022
© 2023 Allient Inc.

KDRX45HE3R
575V, Enclosed Type 3R

SCALE: 1/8 | 108645-2DG | SIZE C | SHT.1 OF 1